USN | | | | | | | | | | |

[21AN53]

FIFTH SEMESTER B.Tech EXAMINATION, DECEMBER – 2023

AIRCRAFT STRUCTURES

Time:3 Hours **Maximum Marks:50**

Instructions:
- **i.** PART - A (Question 1-5) answer any 4 questions.
- **ii.** PART - B (Question 6-8) answer any 2 questions.
- **iii.** PART - C (Question 9) is compulsory

PART – A **05X04=20**

1.	**a.**	Define static equilibrium for a general structure subjected to arbitrary external forces and moments .	**02**
	b.	State the equilibrium equations for the following:	
		i. General coplanar(XY plane) ,non concurrent force system.	**03**
		ii. Coplanar , concurrent force system.(XY plane)	
		iii. Space concurrent force system(XYZ)	
2	**a.**	With a neat sketch state the unsymmetrical bending stress equation and explain all the terms used in the equation.	**02**
	b.	What is the importance of shear center?	03
3.	**a.**	Name any two *stiffened shell* structures in aircraft construction. Name the stiffening units.	**02**
	b.	Give the principle behind idealization of a wing section.	**03**
4	**a.**	In a linear structure, the transverse deflection at point 1 is 2mm due to a transverse load of 20N at point 2.What is the deflection at 2 when load at 1 is 40N.	02
	b.	A cantilever beam is subjected to loads P1,P2 & P3 at points 1,2 & 3 respectively Express deflections at 1,2 & 3 using influence coefficients.	**03**
5.	**a.**	Draw a simply supported column with an axial load ,P.	02
	b.	State the first 3 critical loads and draw the 3 corresponding mode shapes for the above column..	03

PART - B **09X02=18**

6.	**a.**	Define Neutral axis and Principal axis.	**03**
	b.	Determine the direct stress at the points 1,2,3 and 4 , due to a positive bending moment M, in the vertical plane of a thin walled beam shown in Fig.1	**06**

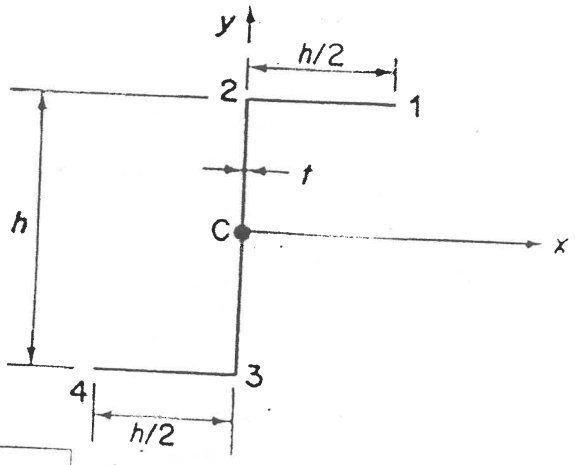

Fig.1

7. a. Define shear flow and shear stress in thin walled structures. **03**

b. Calculate the shear flow distribution in the thin walled open circular section beam shown in Fig 2 produced by a vertical shear load Sy acting through its shear centre. 06

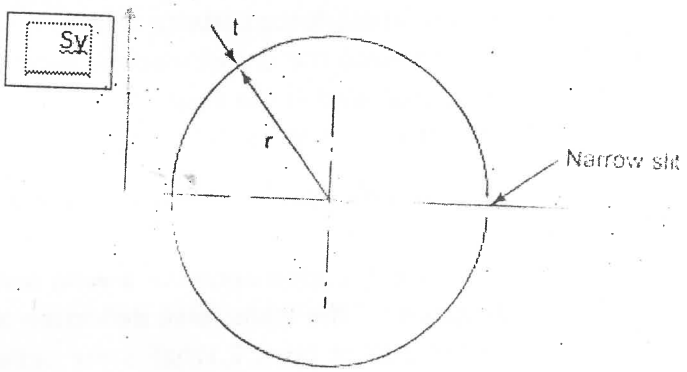

Fig.2

8. a. Derive *Bredt-Batho* relation for a closed thin walled beam subjected to torque T. **03**

b. A thin walled cantilever box beam shown in Fig.3 of length L with cross section $b \times c$ and thickness t is subjected to torque T. Determine the shear flow, shear strain energy and the twist . 06

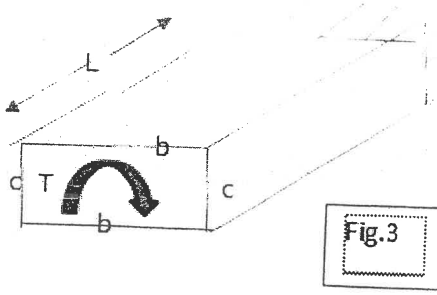

Fig.3

PART - C

01X12=12

9. The idealized fuselage shown in Fig.4 is subjected to a bending moment of 300kNm applied in the vertical plane of symmetry. Find the maximum & minimum stressed booms and state its values. **12**

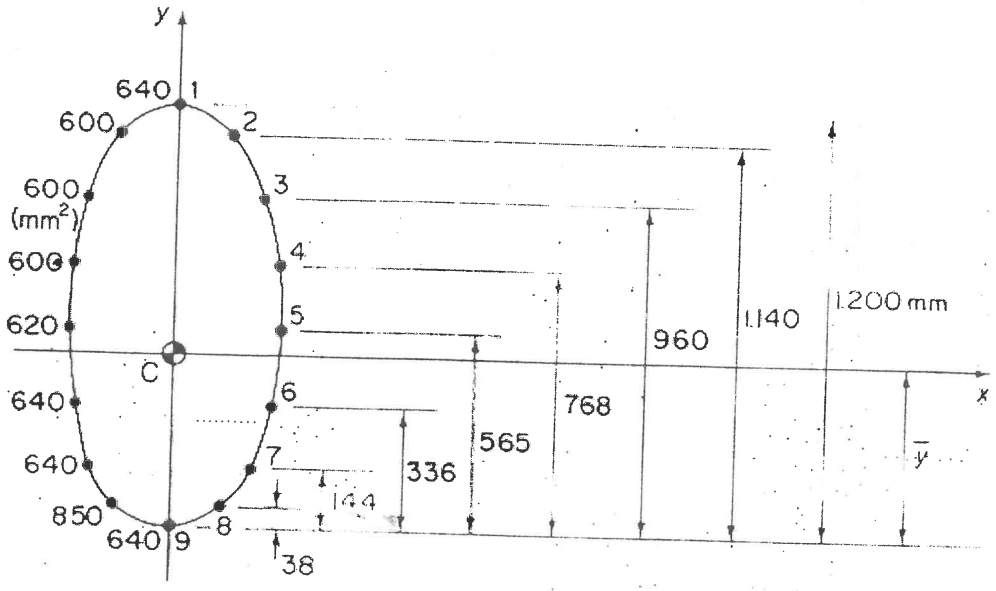

Fig. 4